Microelectronics Reliability 55 (2015) 654–661

Contents lists available at ScienceDirect

Microelectronics Reliability

journal homepage: www.elsevier.com/locate/microrel

Design of a folded cascode opamp with increased immunity to conducted electromagnetic interference in 0.18 μm CMOS

Anna Richelli [a], Gilbert Matig-a [b], Jean-Michel Redouté [b,*]

[a] Dept. of Information Eng., University of Brescia, Brescia, Italy
[b] Dept. of Electrical and Computer Systems Eng., Monash University, Melbourne, Australia

ARTICLE INFO

Article history:
Received 17 July 2014
Received in revised form 26 December 2014
Accepted 29 December 2014
Available online 20 January 2015

Keywords:
Electromagnetic compatibility
Electromagnetic immunity
Mixed-signal integrated circuit design
CMOS instrumentation amplifier input stage

ABSTRACT

This paper presents a folded cascode CMOS instrumentation amplifier input stage with an increased immunity to electromagnetic interference (EMI): this structure is based on a recycling folded cascode topology, and has been designed in a 0.18 μm UMC CMOS process. Measurements illustrate that the modified recycling folded cascode exhibits an increased EMI immunity while preserving a satisfactory frequency response.

© 2015 Elsevier Ltd. All rights reserved.

1. Introduction

The overall effect of electromagnetic interference (EMI), which is injected conductively into the leads of an integrated circuit (IC), is difficult to predict accurately owing to the fact that all the existing coupling paths need to be taken into account [1–4]. Many successful circuit approaches, innovative designs and robust topologies with a varying degree of immunity to EMI have been reported in the literature [5].

Common mitigation mechanisms of EMI include the use of shielding, decoupling and protective components such as EMI chokes and even entire noise cancelling circuits [6–9]. However, these implementations require bulky additional components and are less suited to miniaturized systems such as instrumentation amplifiers measuring sensitive sensor signals. Exacerbating the EMI issues in the latter circuits, the interconnections used to connect the sensor to the electronic conditioning circuit act as undesirable antennas for radiated EMI, which swamps the sensor signals being received by the instrumentation amplifier (Fig. 1). This is a known problem in automotive drive-by-wire and fly-by-wire control systems in which actuators and sensor networks are connected to data acquisition systems by means of (long) electric wires which are typically subjected to high levels of EMI [10]: the same issue has been reported in diverse applications such as in neural recording amplifiers as well as in a variety of sensor systems [11,12].

The EMI injection taking place in the interconnections between the sensor and the instrumentation amplifier is mostly common-mode since the interconnecting wires are routed close to each other, as shown in Fig. 1. This common-mode EMI can typically attain very high values of several tens of volts: the direct power injection (DPI) measurement specification mentions an EMI voltage of maximally 45 V amplitude which must be injected through a coupling capacitance of 6.8 nF into an IC pin, for a zone 1 appliance [13]. Conversely, the differential sensor signal is usually quite small and in the mV range. For these reasons, a large common-mode rejection ratio (CMRR) is necessary to ensure that the measured differential signal is not distorted beyond recognition by the injected common-mode EMI: several designs have been presented to avoid this effect [14,15]. Unfortunately, as a certain degree of mismatch is inevitable, instrumentation amplifiers need to be designed so as not to be swamped by out-of-band differential EMI signal components. A careful IC layout (i.e. following matching rules, inserting dummy components, observing common centroid structures, etc) can strongly reduce this mismatch: however, some random mismatch between components is inevitable and stems from process variation.

Earlier works have shown that a differential pair will generate an offset voltage when it is simultaneously being driven by a common-mode and differential-mode signal: this offset is caused by the finite impedance which is present at the tail current node

* Corresponding author.

http://dx.doi.org/10.1016/j.microrel.2014.12.019
0026-2714/© 2015 Elsevier Ltd. All rights reserved.

[16–18]. The ensuing input referred offset has been calculated to be equal to:

$$V_{OS} = \frac{1}{V_{GS} - V_{th}} \int_{-\infty}^{\infty} |H_c(\omega) \cdot V_c(\omega) \cdot V_d(\omega)| \cdot cos\phi \cdot d\omega, \quad (1)$$

where

$$H_c(\omega) = \frac{V_{GS_{1,2}}}{V_c(\omega)}. \quad (2)$$

ϕ is the phase angle between the common-mode and differential-signal, H_c is the common-mode transfer function between the input and the gate-source voltage, V_{GS} is the bias gate-source voltage and V_{th} is the threshold voltage. Differential pairs with an increased immunity to EMI injected in their input terminals have been designed, such as the cross-coupled differential pair [17] and the source-buffered differential pair [18]. However, they have been designed using small-signal transistor models and are therefore not performing accurately for larger EMI signals.

This paper investigates the robustness to EMI of a folded cascode (FC) instrumentation amplifier input stage when large conducted interferences are injected into the input pins. As will be shown, a series RC filter attenuating the EMI signal which is injected in the input terminals can strongly deteriorate the AC behavior of the opamp by reducing its bandwidth and compromising its closed loop stability. This paper proposes a practical solution based on the recycling folded cascode (RFC) topology [19,20] to increase the EMI immunity without overly sacrificing the other design specifications. Section 3 evaluates the results of an EMI susceptibility analysis on folded cascode structures. The EMI behavior of a modified recycling folded cascode topology is proposed, boosting its EMI immunity without compromising its frequency response. Section 4 presents the measurements results. Section 5 concludes this paper.

2. EMI susceptibility of commercial operational amplifiers

In recent years, EMI effects were carefully investigated both theoretically and experimentally in order to investigate possible prevention methodologies, such as in high-performance mixed-signal ICs that may include several operational amplifiers. The most sensitive circuits to EMI are the analog circuit blocks, including the opamps. In order to investigate the EMI effects on a generic amplifier, the interfering signals are represented by a sinusoidal waveform generated with zero DC mean value superimposed on the pins connected to relatively long wires. The amplifier under test is in the voltage follower configuration, as reported in the literature [21–23], since it is a worst case condition [21]. One of the most undesirable effects of EMI is the shift of the output DC mean value (offset) which may asymptotically force the amplifier to saturation. In many analog applications, among all the possible interfering signals, the ones superimposed on the input pins of the operational amplifier are the most difficult to block. This is due to the fact that external filters influence the original input signals which are often small in amplitude: additionally, in presence of negative feedback, stability needs to be considered as well. On the other hand, in some applications, such as in automotive circuits, the amplifiers can be routed very close to the power devices or to high speed digital circuits, sharing the same substrate. Therefore, in this case, the interferences arising from the substrate and the power supply are critical, as discussed in the literature [24,25]. As a qualitative example of the EMI susceptibility, the measured voltage offset of some commonly used commercial amplifiers configuration are plotted in Figs. 2–4. All the amplifiers were connected in a voltage follower configuration and the interfering sinusoidal signal which was applied to the noninverting input pin and to the power supply lines (both positive and negative), had an amplitude of 1 V and a frequency ranging from 100 kHz up to 1 GHz. The power supply was 12 V. It is worth noting that the commercial amplifiers are fabricated in different technologies: bipolar for the uA741 and the OPA177, CMOS for the ICL7611 and both (CMOS input stage, bipolar output stage) for the CA3140: further details, for example in the topologies, are not provided by the data sheets.

Although the measurement results show different susceptibility levels between the amplifiers, the measured offset voltage is clearly significant and can often debias sensitive circuit nodes.

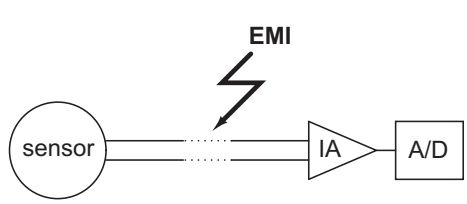

Fig. 1. The sensor is wired to a data acquisition front-end comprised of an instrumentation amplifier (IA) followed by an analog to digital converter (A/D). The noisy electromagnetic environment generates common-mode EMI in the wire pair.

3. EMI immunity of folded cascode input stages

3.1. EMI injection setup

In order to investigate the effects of EMI injection in the input terminals of generic amplifiers, the interfering signals are represented by sinusoidal waveforms which are injected in the input pins [21]: this models the practical situation where the input terminals are connected to long wires, which act as parasitic antennas.

Moreover, the amplifier is considered to be connected in a voltage follower configuration, since this setup leads to a worst case condition. This is understood by considering that the EMI induced offset depends on both common mode and differential mode signals injected into the input differential pair. The voltage follower configuration is the worst case condition because the common mode and differential mode components at the input are maximized [26,27]. Using this configuration with previously described sinusoidal EMI injection maximizes the effect of EMI, which typically results in a considerable shift of the output DC mean value which may asymptotically force the amplifier into saturation.

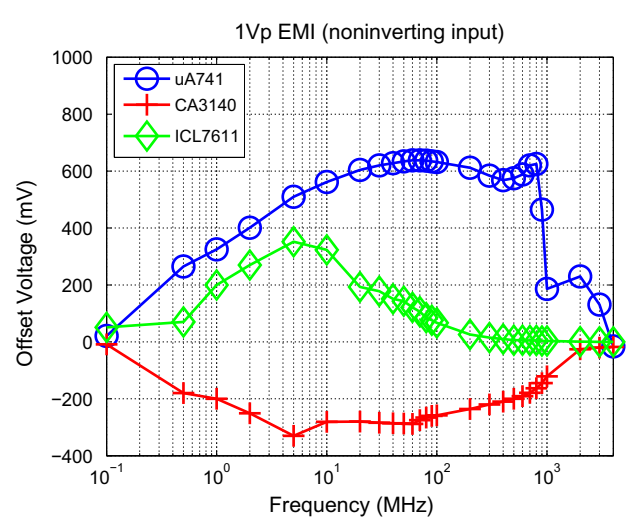

Fig. 2. Susceptibility of some commercial amplifiers to EMI injected in the noninverting input terminal (voltage follower configuration).

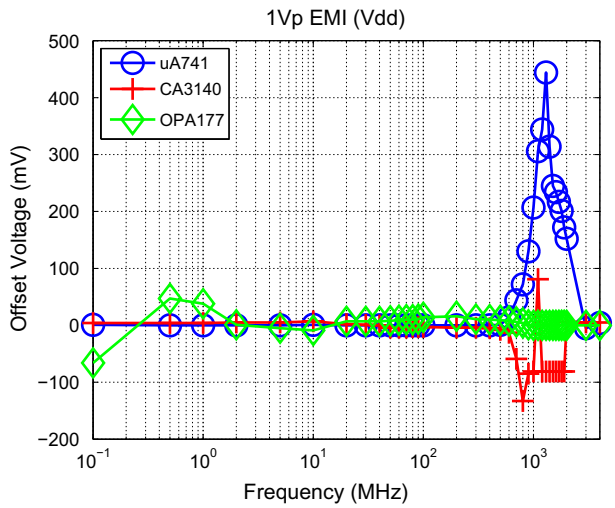

Fig. 3. Susceptibility of some commercial amplifiers to EMI injected into the Vdd terminal (voltage follower configuration).

The latter transient response is mainly determined by the parasitic capacitances in the amplifier and by the nonlinearities introduced in the first stage, as well as by the asymmetry of signal paths during the positive and the negative half cycles of the sinusoidal EMI waveform: this corresponds to what has been described in earlier works [21,22,28].

3.2. The classic folded cascode amplifier

The first case study considers an FC operational amplifier which has been designed in a standard UMC 0.18 μm CMOS technology (Fig. 5). The nominal supply voltage (V_{dd}) is 1.8 V, and the designed amplifier exhibits a gain of 56 dB, a gain bandwidth (GBW) product of 6.9 MHz and a phase margin of 89°. In order to simulate the amplifier's robustness to a worst case EMI injection, the interfering signal is represented by a sinusoidal waveform at the noninverting input pin while the amplifier is connected as a voltage follower. Considering the supply voltage of 1.8 V, the amplitude of the interfering signal has been chosen of 450 mV, while the input terminal has been biased at the mid-supply voltage (0.9 V). The EMI frequency ranges from 1 MHz up to 4 GHz, in order to consider the

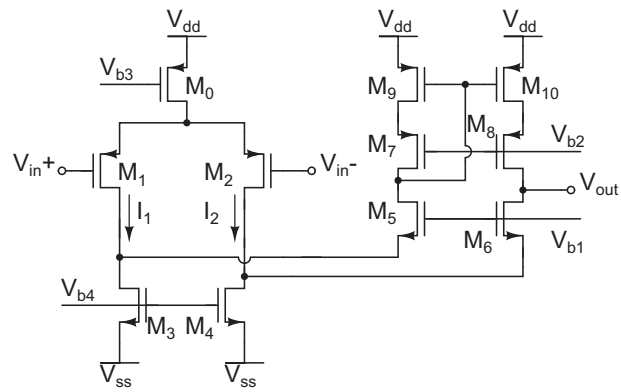

Fig. 5. Schematic of the folded cascode (FC) opamp.

most common sources of interferences [26–29]. The simulated maximum offset of the original FC amplifier is shown in Fig. 6: as can be seen, the effect of EMI becomes more pronounced starting from 30 MHz (Fig. 6). As stated in literature, the EMI susceptibility of opamps is correlated to the slew rate asymmetry and to the effects of parasitic capacitances [5,21,22]. In particular, the slew rate asymmetry plays a major role at low-medium frequencies, while the parasitic capacitances are more relevant at high frequencies, above the signal bandwidth.

In order to reduce the susceptibility of the amplifier to interferences, a common practice is to add an RC low-pass filter to the input differential pair [30]. The RC filter has been designed according to [30]: the cut-off frequency was chosen equal to 3.1 MHz, in order to include the low-medium EMI frequencies, which can cause offset due to slew rate limitations. This frequency is derived from the maximum frequency which is not limited by the slew rate (SR) limitations, given by:

$$f = \frac{SR}{2 \cdot \pi \cdot A_{max}}, \tag{3}$$

where A_{max} is the maximum amplitude of the signal, 900 mV in this case. The opamp with an RC filter has a differential gain:

$$A_d(s) = \frac{A'_d(s)}{1 + sRC}, \tag{4}$$

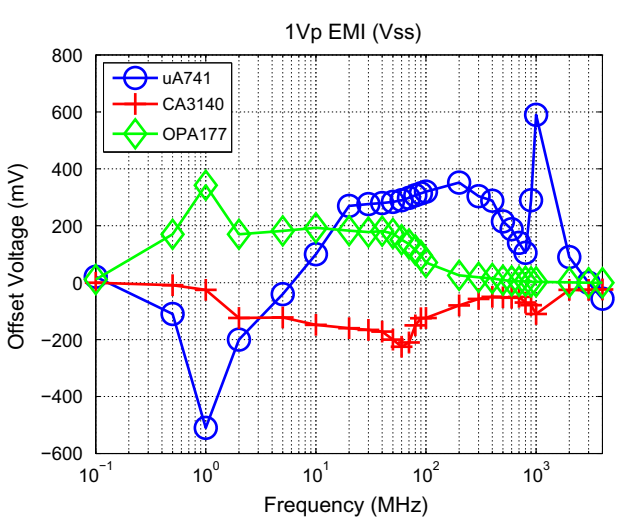

Fig. 4. Susceptibility of some commercial amplifiers to EMI injected into the Vss terminal (voltage follower configuration).

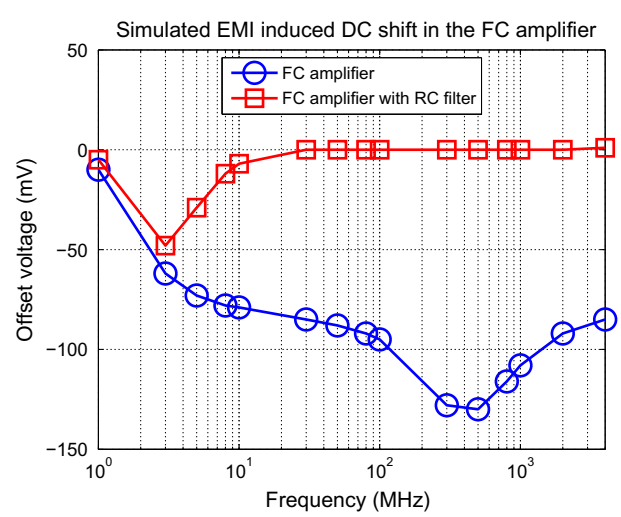

Fig. 6. Effect of EMI injected into the input terminal: a comparison between the original FC amplifier and the FC amplifier with RC filter.

where $A'_d(s)$ is the differential closed loop gain of the original amplifier, given by:

$$A'_d(s) = -2gm_{FC1,2} \cdot R_{outFC}. \quad (5)$$

The small signal parameters $gm_{FC1,2}$ and R_{outFC} are:

$$gm_{FC1,2} = \frac{2 \cdot I_{1,2}}{V_{SG_1,2} - V_{th}}, \quad (6)$$

where $I_{1,2}$ is the drain current through M1 and M2, $V_{SG_1,2}$ is the source-gate voltage of the input differential pair transistors, and

$$R_{outFC} = (gm_8 \cdot ro_8 \cdot ro_{10}) || (gm_6 \cdot ro_6 \cdot (ro_4 || ro_2)), \quad (7)$$

where gm and ro represent the transconductance and output resistance, respectively; R_{out} is the small signal resistance at the output of the amplifier. As shown in Fig. 6, this circuit exhibits a high immunity to interferences. However, this approach contains the inherent disadvantage that the EMI filter reduces the bandwidth of the input differential pair which, in presence of the negative feedback, dramatically deteriorates the phase margin. Simulations confirm that the gain bandwidth product is reduced to 4 MHz in this design, while the phase margin drops down to 35°, which is detrimental for stability. Analyzing the AC behavior of the original FC amplifier, a dominant pole is found at 11 kHz, followed by a non-dominant pole at 350 MHz. However, in the FC amplifier with the RC filters, the frequency of the first non-dominant pole is reduced to the cut-off frequency of the RC filter, namely at 3.1 MHz. As shown in Fig. 7, there appears to be a sweet spot at which the susceptibility to EMI is increased: for frequencies below the unity gain frequency, negative feedback will mitigate the EMI induced DC offset, while for larger frequencies, the EMI injected in the input will be filtered by the parasitic components associated to the PCB tracks, input pins and interconnects. As can be seen in this figure, lowering the filter frequency (f_{filter}) will reduce the EMI sweet spot but equally decrease the phase margin.

3.3. The recycling folded cascode opamp

A modification of the original FC architecture has been proposed in [19]: the recycling folded cascode (RFC) exhibits a better transconductance, gain and slew rate compared to the FC, and is depicted in Fig. 8. This structure is based on using scaled current mirrors, which results in an improved transconductance, gain and slew rate, thus retaining the same power and area consumption of the original FC amplifier. Considering the AC behavior, the differential closed loop gain of the RFC amplifier is given by:

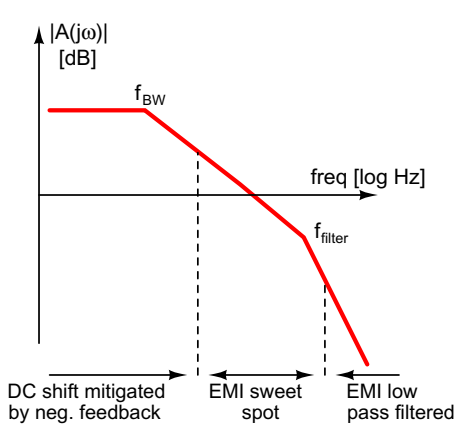

Fig. 7. Frequency at which the FC amplifier will be susceptible to EMI injected into its noninverting input.

$$A'_d(s) = -2 \cdot (1 + K) \cdot gm_{RFC1,2} \cdot R_{outRFC}, \quad (8)$$

where K is the current mirror ratio. The small signal parameters $gm_{RFC1,2}$ and R_{outRFC} are written as:

$$gm_{RFC1,2} = \frac{gm_{FC1,2}}{2}, \quad (9)$$

because the drain current of M_0 supplies two input pairs instead of one, and:

$$R_{outRFC} = (gm_8 \cdot ro_8 \cdot ro_{10}) || (gm_6 \cdot ro_6 \cdot (ro_4 || ro_2)). \quad (10)$$

$K = 3$ creates an optimal trade-off between gain, bandwidth, power consumption and stability, as derived in [19]. In this case, the differential gain of the RFC amplifier can be rewritten as twice the gain of the FC amplifier, as can be seen in Eq. (8). Since the output resistances of the RFC and FC topologies are almost identical, the GBW product of the RFC is twice as large as the one of the FC.

The complementary AC current path allows to create a pole-zero doublet by adding a low pass filter in the complementary differential pair's path. As illustrated in Fig. 9, it is possible to increase the difference between the zero and the pole frequency by applying the RC filter only at the auxiliary differential pair's inputs. These design observations lead to the improved high EMI immunity folded cascode amplifier, drawn in Fig. 10 [20]. Considering the AC model of the RFC amplifier with single RC filter depicted in Fig. 10, the AC gain can be written as:

$$A_d(s) = -\frac{gm_{RFC1,2} \cdot (1 + sRC) + K \cdot gm_{RFC1,2}}{1 + sRC} \cdot R_{outRFC}. \quad (11)$$

This result clearly shows a pole-zero doublet. The pole and zero are situated at:

$$\omega_p = -\frac{1}{RC}, \omega_z = -\frac{1 + K}{RC}, \quad (12)$$

where K is the mirror ratio as described previously. The effect of the pole-zero doublet on EMI filtering is depicted in Fig. 11. The GBW product of the RFC amplifier with RC filter (pole frequency equal to 3.1 MHz) on the auxiliary input pair is about 10.6 MHz and the phase margin is of 59°. Two small capacitors C_{b1} and C_{b2} (1pF each in this design) between the outer gates and the common source of the differential pair are added: these improve the EMI immunity by filtering the high frequency out-of-band EMI without any significant effect on GBW and phase margin [17,18].

In order to simulate the RFC opamps' robustness to large EMI signals, the same simulation conditions (voltage follower configuration, 450 mV EMI amplitude, 900 mV input DC bias voltage and frequency range from 1 MHz up to 4 GHz) have been considered. The simulated EMI induced DC shift is plotted in Fig. 12: this figure shows that for EMI frequencies lying above the unity gain frequency of the opamp, the maximum voltage offset induced by the EMI signals is reduced from more than 200 mV down to maximally 50 mV.

4. Measurements

The presented folded cascode and the modified recycling folded cascode opamps have been integrated in the UMC 0.18 μm process: a microphotograph of the test chip is shown in Fig. 13. The FC and RFC topologies without RC filter occupy the same area, which is 62 μm × 100 μm in present process. The area of the RFC amplifier with RC filter occupies 80 μm × 115 μm: the RC filter occupies 33% of the area of that amplifier. An accurate layout of both the amplifiers has been designed following optimal matching design practices: moreover, several mitigation techniques have been adopted to reduce the susceptibility to the substrate and power supply noise, as suggested in [25], such as a compact layout,

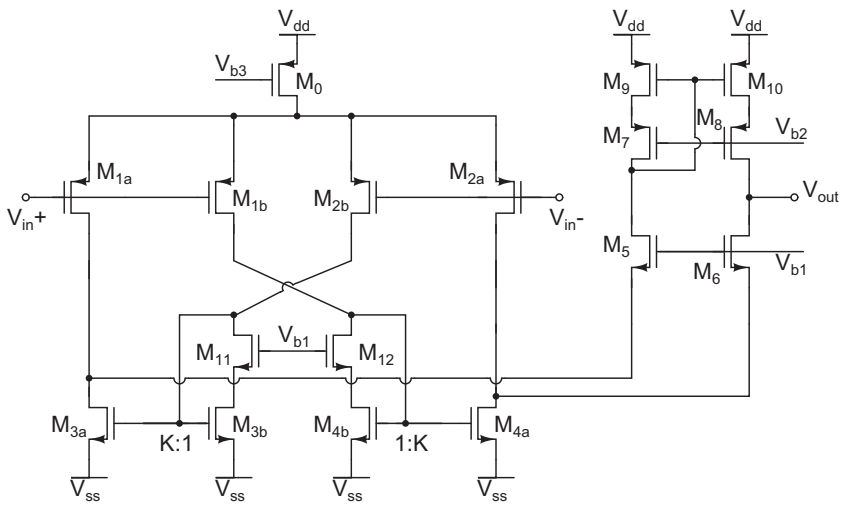

Fig. 8. Schematic of the recycling folded cascode (RFC) amplifier.

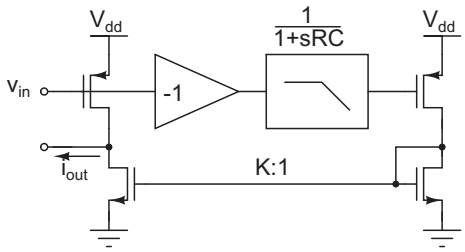

Fig. 9. Principle schematic illustrating how the pole-zero doublet is created by adding a low pass filter in the complementary differential pair's path.

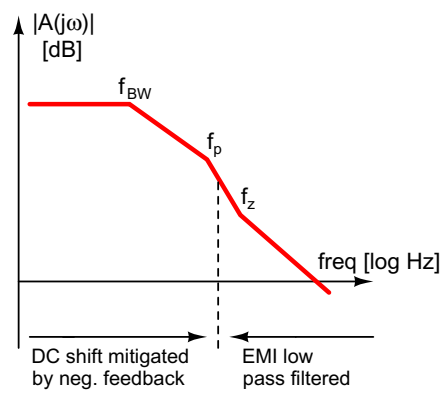

Fig. 11. The effect of the pole-zero doublet on the EMI injected into the noninverting input.

redundant substrate contacts, guard rings, isolation and noise aware floorplanning. The measurement setup and PCB picture is shown in Figs. 14 and 15 respectively. The test chip has been packaged in a JLCC44 package. For the conducted EMI measurements, both the FC and the RFC opamps were connected in the voltage follower configuration, and, following the direct power injection (DPI) measurement standard described in [13], an EMI source with an amplitude of 450 mV was injected in the noninverting input superposed on an input common-mode voltage of 0.9 V by means of a wideband bias tee. Table 1 summarizes the main characteristics of both amplifiers.

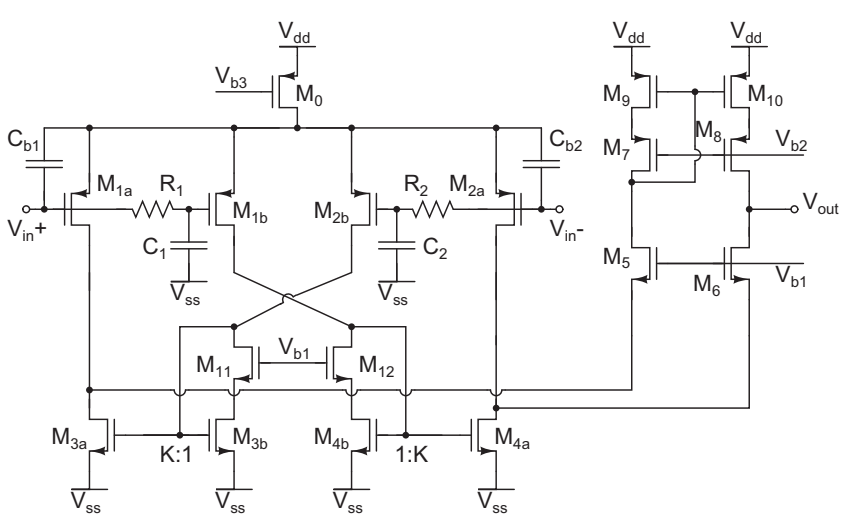

Fig. 10. Schematic of the modified RFC amplifier.

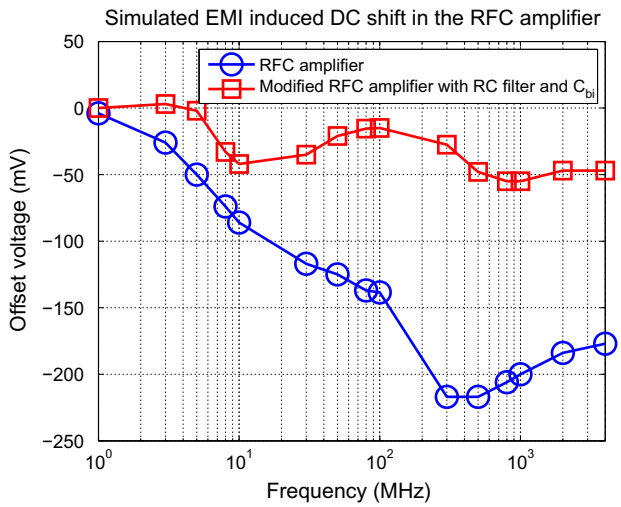

Fig. 12. Effect of EMI injected into the input terminal of the original and modified RFC opamps connected as a voltage follower.

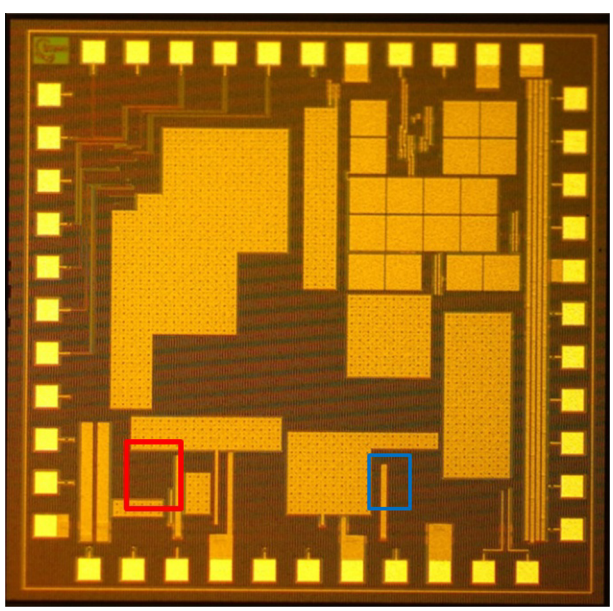

Fig. 13. Microphotograph of the UMC 0.18 μm test chip. The FC and RFC structures were layouted in the right and left boxes respectively.

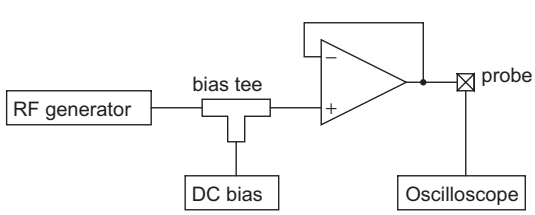

Fig. 14. DPI measurement setup.

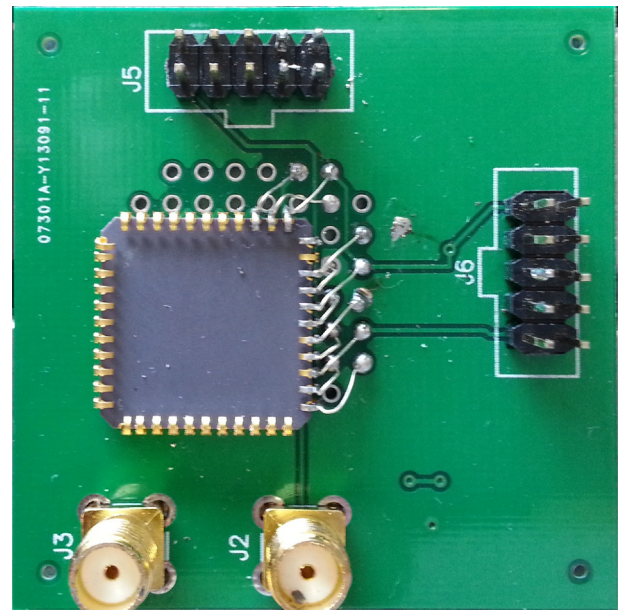

Fig. 15. PCB used to perform the DPI measurements. The EMI is injected in the SMA connectors; the output offset is measured using the right hand side headers. The supply voltage is applied at the top header.

Table 1
AC performances: a comparison between the FC and RFC amplifiers.

Parameter	FC	Modified RFC
Voltage gain	56 dB	65 dB
Bandwidth	11 kHz	7 kHz
GBW	6.9 MHz	10.6 MHz
PM	89°	59°
Power consumption	590 μW	620 μW

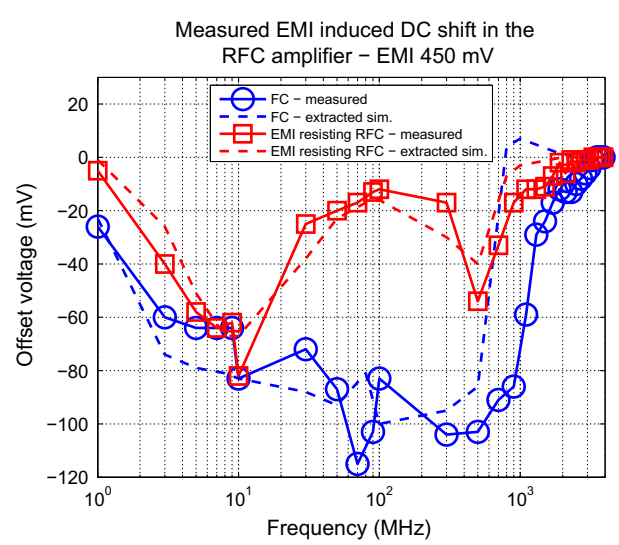

Fig. 16. Measurements of EMI induced offset as a function of EMI frequency. The EMI amplitude is 0.45 V (V_{DD} = 1.8 V, common-mode bias = 0.9 V).

The resulting DC shift is shown in Fig. 16. In order to improve the accuracy between the measurements and the simulations so as to allow a better comparison between both, the parasitic components associated to the PCB traces, external connections and IC package have been measured and added to the extracted layout simulations, following the methodology that has been applied in earlier works [31]: refer to Fig. 17. Clearly, at EMI frequencies around the unity gain frequency of the amplifiers (1–10 MHz), the open loop gain is not sufficient to reduce the EMI induced offset through negative feedback: additionally, the transistors are being

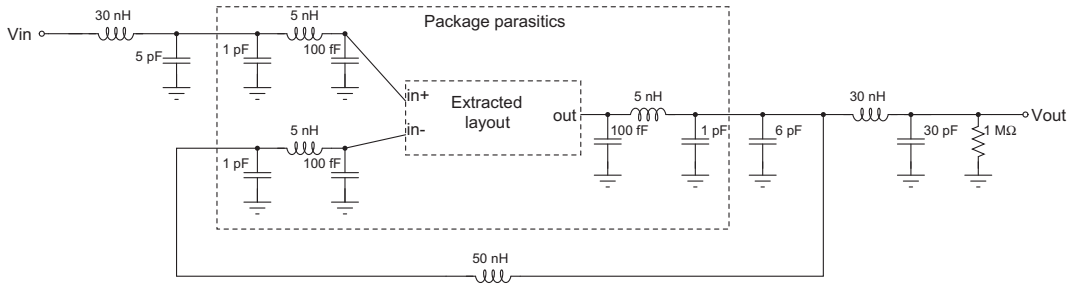

Fig. 17. Parasitic components associated to the PCB, the IC package, the interconnects and to the measurement setup.

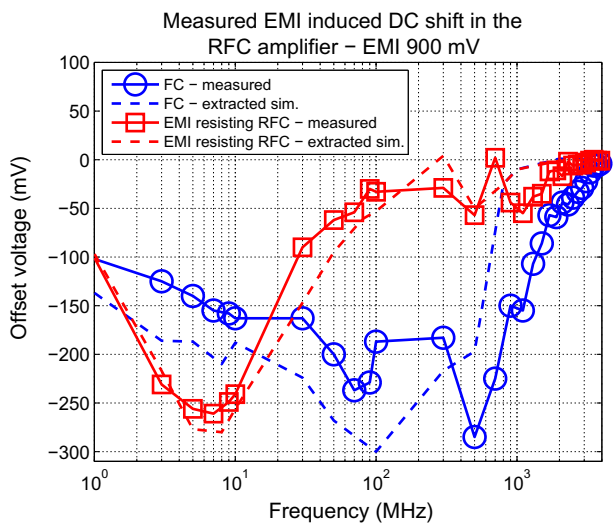

Fig. 18. Measurements of EMI induced offset as a function of EMI frequency. The EMI amplitude is 0.9 V ($V_{DD} = 1.8$ V, common-mode bias = 0.9 V).

overdriven by the significant EMI injection and introduce a different distortion than what their simulation models predict. At high EMI frequencies (above 500 MHz), the injected EMI signal is filtered by the package and by the PCB traces, which mitigates the EMI injection and the corresponding EMI induced DC offset.

Injecting a rail-to-rail EMI amplitude of 900 mV shows an increased DC shift as expected: refer to Fig. 18. At EMI frequencies lying within the unity gain frequency of the opamp, the modified RFC amplifier is producing a worse offset, which can be explained considering that the RFC amplifier uses additional stacked devices (transistors M11 and M12 in Fig. 10), which are not present in the FC opamp. Below the unity gain frequency, the dynamic range is therefore reduced resulting in nonlinear distortion for large amplitude interferences. However, for out-of-band EMI frequencies lying above the unity gain frequency, the modified RFC opamp maintains a decreased EMI induced offset compared to the classic FC.

5. Conclusion

This paper introduces a folded cascode CMOS instrumentation amplifier input topology which exhibits a high degree of robustness to conducted EMI. This circuit has been designed in a 0.18 µm standard CMOS process. Measurements illustrate that the proposed structure exhibits a high EMI immunity while still preserving a satisfactory frequency response without compromising the remaining design specifications.

References

[1] Ben Dhia S, Ramdani Mohamed, Sicard Etienne. Electromagnetic compatibility of integrated circuits. Springer; 2006.
[2] Ben Dhia S, Boyer A. Long-term electro-magnetic robustness of integrated circuits: EMRIC research project. Microelectron Reliab 2013;53(9–11):1266–72.
[3] Bona C, Fiori F. MOS power transistor model for electromagnetic susceptibility analysis. Microelectron Reliab 2011;51(8):1356–64.
[4] Sicard E, Dienot JM. Issues in electromagnetic compatibility of integrated circuits: emission and susceptibility. Microelectron Reliab 2005;45(9–11):1277–84.
[5] Redouté J-M, Steyaert M. EMC of analog integrated circuits. Springer; 2010.
[6] Chen Y-C, Hsu W-H, Cheng S-H, Cheng YT. A power sensor tag with interference reduction for electricity monitoring of two-wire household appliances. IEEE Trans Ind Electron 2014;61(4):2062–70.
[7] Coenen M, Goedbloed J. Electromagnetic compatibility. Mybusinessmedia BV; 2010.
[8] Besse P, Abouda K, Abouda C. Identifying electrical mechanisms responsible for functional failures during harsh external ESD and EMC aggression. Microelectron Reliab 2011;51(9–11):1597–601.
[9] Gros J-B, Duchamp G, Levant J-L, Marot C. Control of the electromagnetic compatibility: an issue for IC reliability. Microelectron Reliab 2011;51(9–11):1493–7.
[10] Isermann R, Schwarz R, Stolzl S. Fault-tolerant drive-by-wire systems. IEEE Control Syst Mag 2002;22(5):64–81.
[11] Aiello O, Redouté J-M. Design of a neural recording amplifier robust to EMI. In Asia-Pacific international EMC symposium and exhibition. Melbourne, Australia; 2013.
[12] Aiello O, Fiori F. A new MagFET-based integrated current sensor highly immune to EMI. Microelectron Reliab 2013;53(4):573–81.
[13] Measurement of E/M Immunity 150 kHz to 1 GHz – Part 4: Direct RF power injection method, IEC 62132-4, Ed. 1: ICs; 2004.
[14] Compagne E, Maulet S, Genevey S. An analog front-end for remote sensor applications with high input common-mode rejection including a 16 bit Sigma–Delta ADC in 0.35 µm 3.3 V CMOS Process. In IEEE European solid-state circuits conference (ESSCIRC), Leuven, Belgium; 2004. p. 459–62.
[15] Michel F, Steyaert M. Differential input topologies with immunity to electromagnetic interference. In IEEE European solid-state circuits conference (ESSCIRC). Helsinki, Finland; 2011. p. 203–6.
[16] Michel F, Steyaert M. Comparison of high impedance input topologies with low EMI susceptibility. Analog Integr Circ Sig Process 2010;65(2):299–309.
[17] Fiori F. Design of an operational amplifier input stage immune to EMI. IEEE Trans Electromagn Compat 2007;49(4).
[18] Redouté J-M, Steyaert M. EMI resistant CMOS differential input stages. IEEE Trans Circ Syst I 2010;57(2):323–31.
[19] Assaad RS, Silva-Martinez J. The recycling folded cascode: a general enhancement of the folded cascode amplifier. IEEE J Solid State Circ 2009;44(9):2535–42.
[20] Redouté JM, Richelli A. A fundamental approach to EMI resistant folded cascode operational amplifier design. In EMC Europe 2013, Bruges, Belgium, 2013. p. 203–8.
[21] Masetti G, Graffi S, Golzio D, Kovács-Vajna ZsM. Failures induced on analog integrated circuits from conveyed electromagnetic interferences: a review. Microelectron Reliab 1996;36(7/8):955–72.
[22] Setti G, Speciale N. Design of a low EMI susceptibility CMOS operational amplifier. Microelectron Reliab 1998;38:1143.
[23] Masetti G, Setti G, Speciale N. On the key role of parasitic capacitances in the determination of susceptibility to EMI of integrated operational amplifiers. In Proc. EMC99 Zurich; 1999.
[24] Fiori F. New grounding scheme to reduce electromagnetic emission of smart-power system-on-chips. IEEE Trans Power Electron 2012;27(1):224–34.
[25] Widemann C, Stegemann S, John W, Mathis W. Analytic investigations on the susceptibility of nonlinear analog circuits to substrate noise. Adv Radio Sci 2013;11:171–5.

[26] Richelli A. CMOS opamp resisting to large electromagnetic interferences. IEEE Trans Electromagn Compat 2010;52(4):1062–5.
[27] Richelli A, Colalongo L, Kovács-Vajna ZsM. Increasing the immunity to electromagnetic interferences of CMOS operational amplifiers. IEEE Trans Reliab 2003;52(3):349–53.
[28] Graffi S, Masetti G, Piovaccari A. Criteria to reduce failures induced from conveyed electromagnetic interferences on CMOS operational amplifiers. Microelectron Reliab 1997;37(1):95–113.
[29] Richelli A. Increasing EMI immunity in novel Low-voltage CMOS OpAmps. IEEE Trans Electromagn Compat 2012;54(4):947–50.
[30] Walravens C, Van Winckel S, Redouté JM, Steyaert M. Efficient reduction of electromagnetic interference effects in operational amplifiers. Electron Lett 2007;43(2):84–5.
[31] Alaeldine A, Perdriau R, Haidar A. A comprehensive simulation model for immunity prediction in integrated circuits with respect to substrate injection. Microelectron J 2009;40(12):1788–95.